101

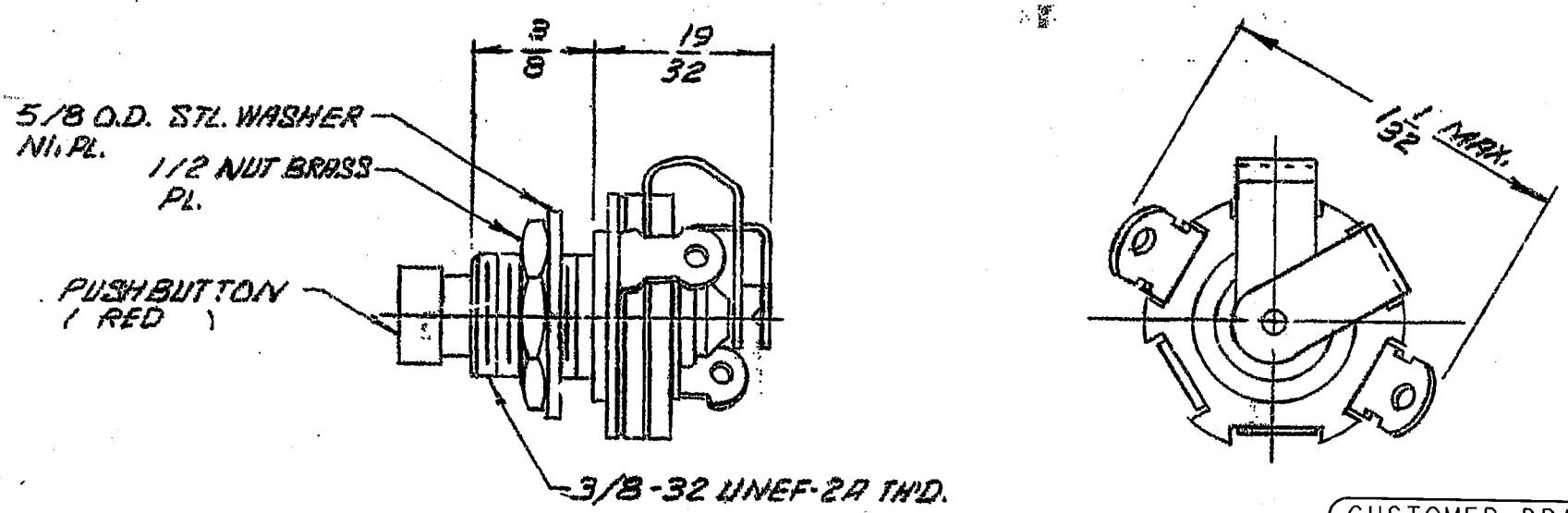

CUSTOMER DRAWING

MATERIALS:

1. BUSHING - BRASS - NI. PL.
2. SPRINGS - NI. SIL. - SPG. TEMP.
3. SPACERS - PAPER BASE PHENOLIC

SCHEMATIC

ISS	SYM	REVISION	BY	DATE
1		REDRAWN	[illegible]	5-5-64
2		ECO 14111	[illegible]	[illegible]
6		ECO 20627	[illegible]	[illegible]

THIS DRAWING DESCRIBES A DESIGN CONSIDERED PROPRIETARY IN NATURE, DEVELOPED AND MANUFACTURED BY SWITCHCRAFT, INC., AND IS RELEASED ON A CONFIDENTIAL BASIS FOR IDENTIFICATION PURPOSE ONLY.

UNLESS OTHERWISE SPECIFIED:

1 - DECIMAL DIMENSIONS ± .005
2 - FRACTIONAL DIMENSIONS ± 1/64
3 - ANGLES ± 1/2°
4 - ALL DIA'S CONCENTRIC WITHIN .005 T.I.R.
5 - ALL DIMENSIONS IN INCHES
6 - FOR THREADS USE UNIFIED PLUG AND RING GAGES ONLY.
7 - REMOVE ALL BURRS.
8 - PART TO BE FABRICATED AS SPECIFIED. MAKE NO DIMENSIONAL ALLOWANCES FOR APPLIED FINISHES, I.E., PLATING, PAINTING, ETC.
9 - HOLES ON SAME CENTERLINE MUST BE ALIGNED WITHIN ± .002

DO NOT SCALE DRAWING

DRAWN BY [illegible]	DATE 5-5-64	FINISH
CHECKED BY [illegible]	DATE 5-14-64	PER FINISH SPEC. NO.
APPROVED BY L. G.	DATE 5-19-64	MATERIAL
SCALE 2:1		PER MAT. SPEC. NO.
FIRST USED ON		SWITCHCRAFT

NAME: NON-LOCKING LITTEL SWITCH

PART NO. 101

ISSUE B

SHEET OF

101, 105, 112, 146